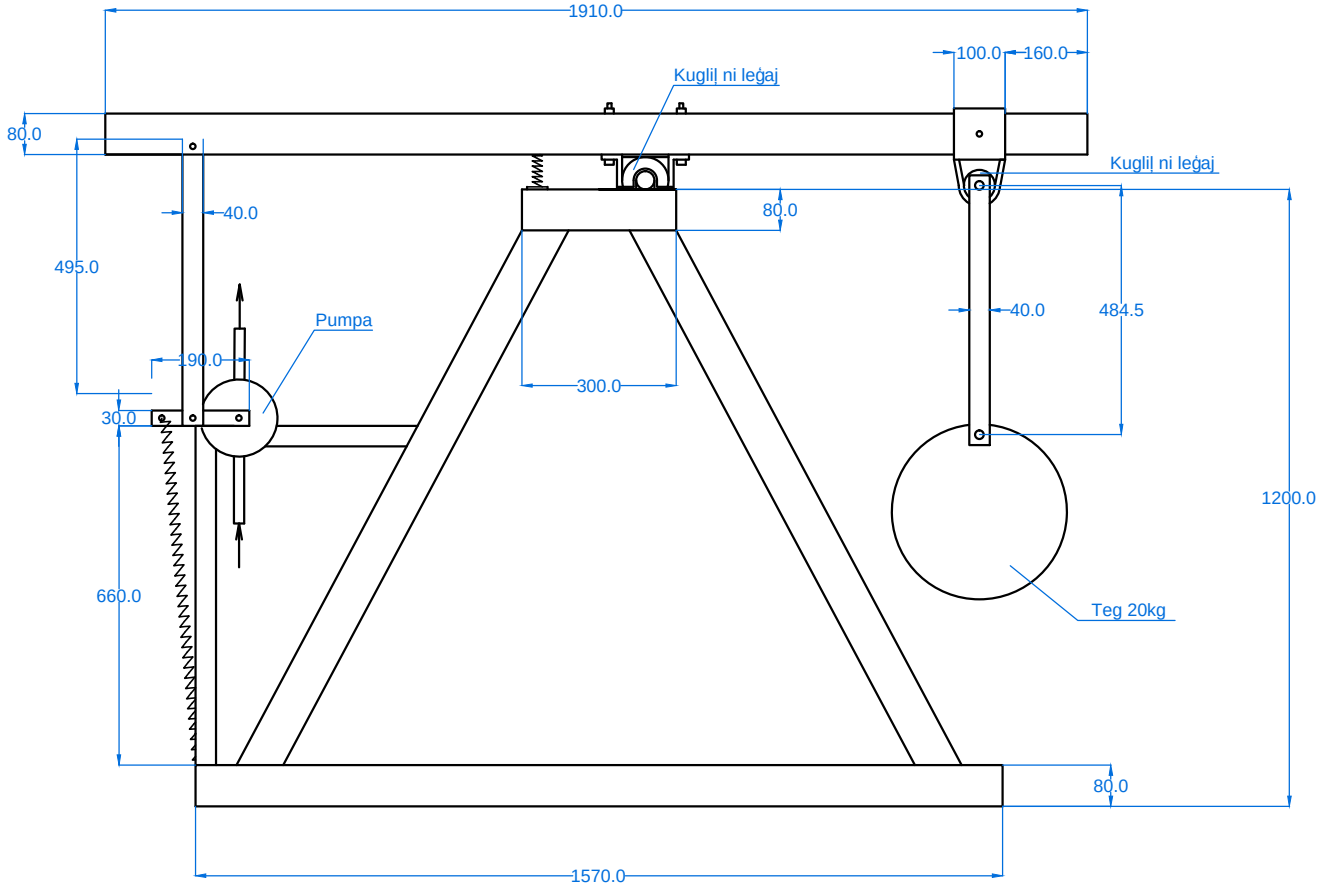
1910.0
100.0
160.0
Kugliĵ ni leĝaj
80.0
Kugliĵ ni leĝaj
40.0
80.0
495.0
40.0
484.5
Pumpa
190.0
300.0
30.0
1200.0
660.0
Teg 20kg
80.0
1570.0

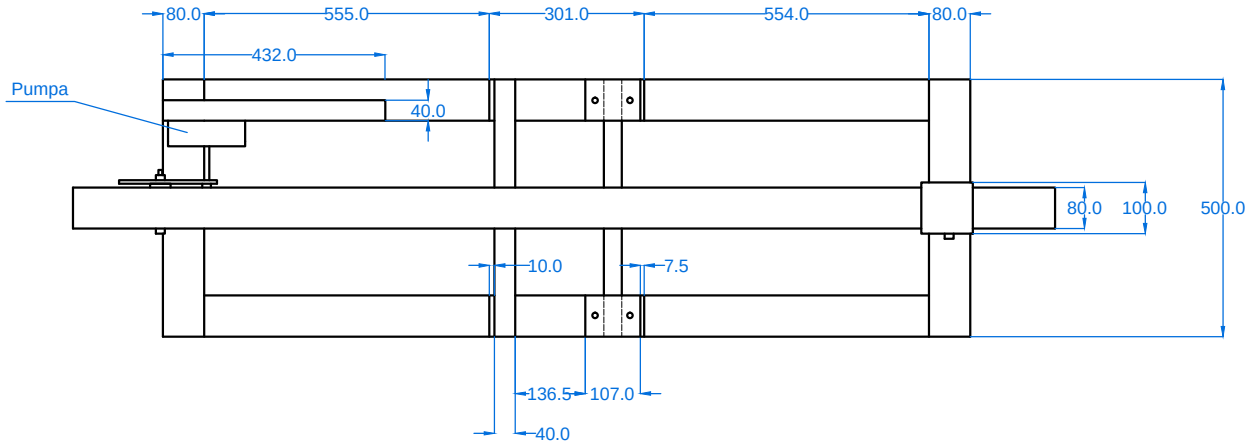
80.0
555.0
301.0
554.0
80.0
432.0
Pumpa
40.0
80.0
100.0
500.0
10.0
7.5
136.5
107.0
40.0

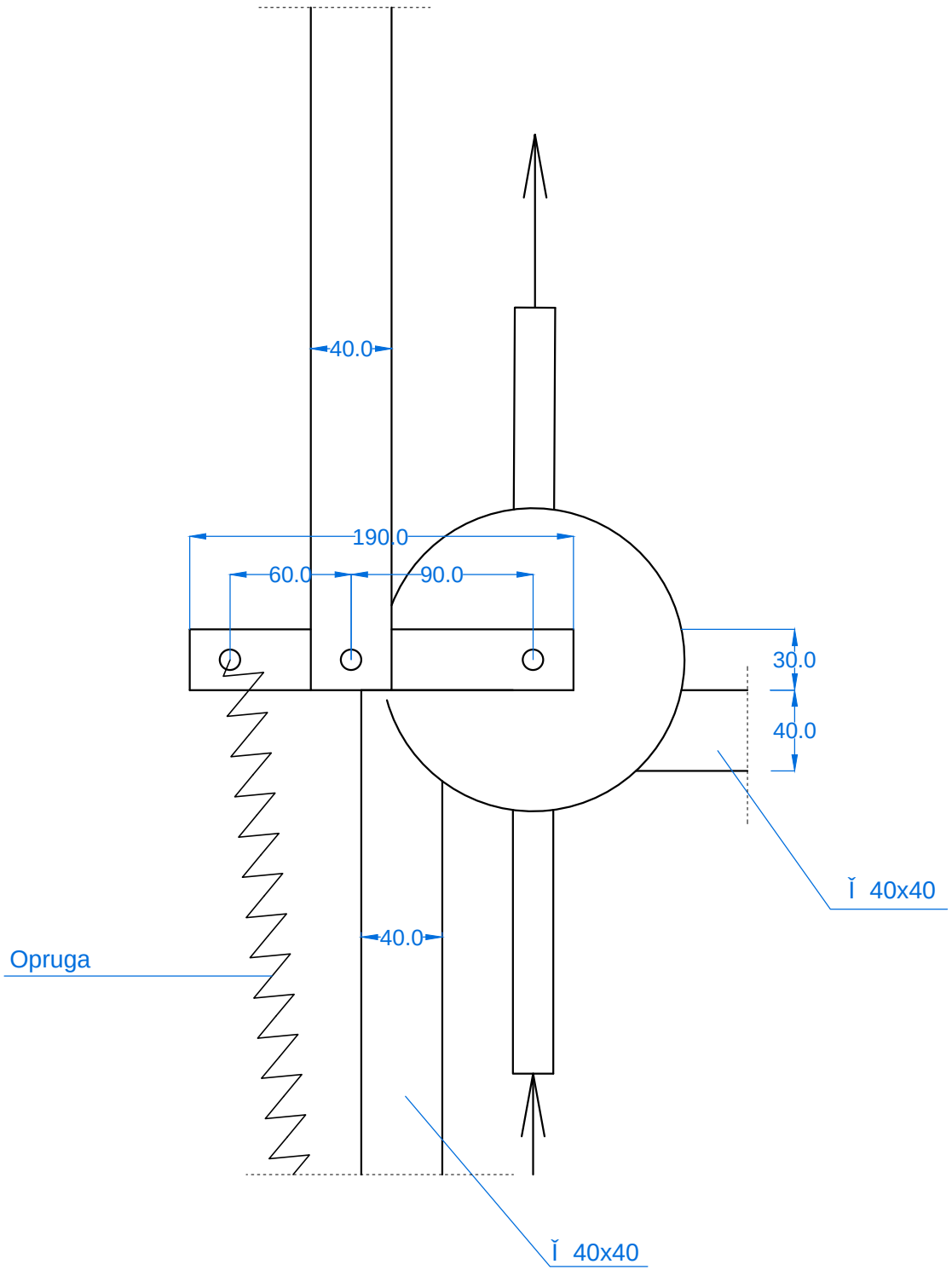
40.0
190.0
60.0
90.0
30.0
40.0
Ĭ 40x40
40.0
Opruga
Ĭ 40x40

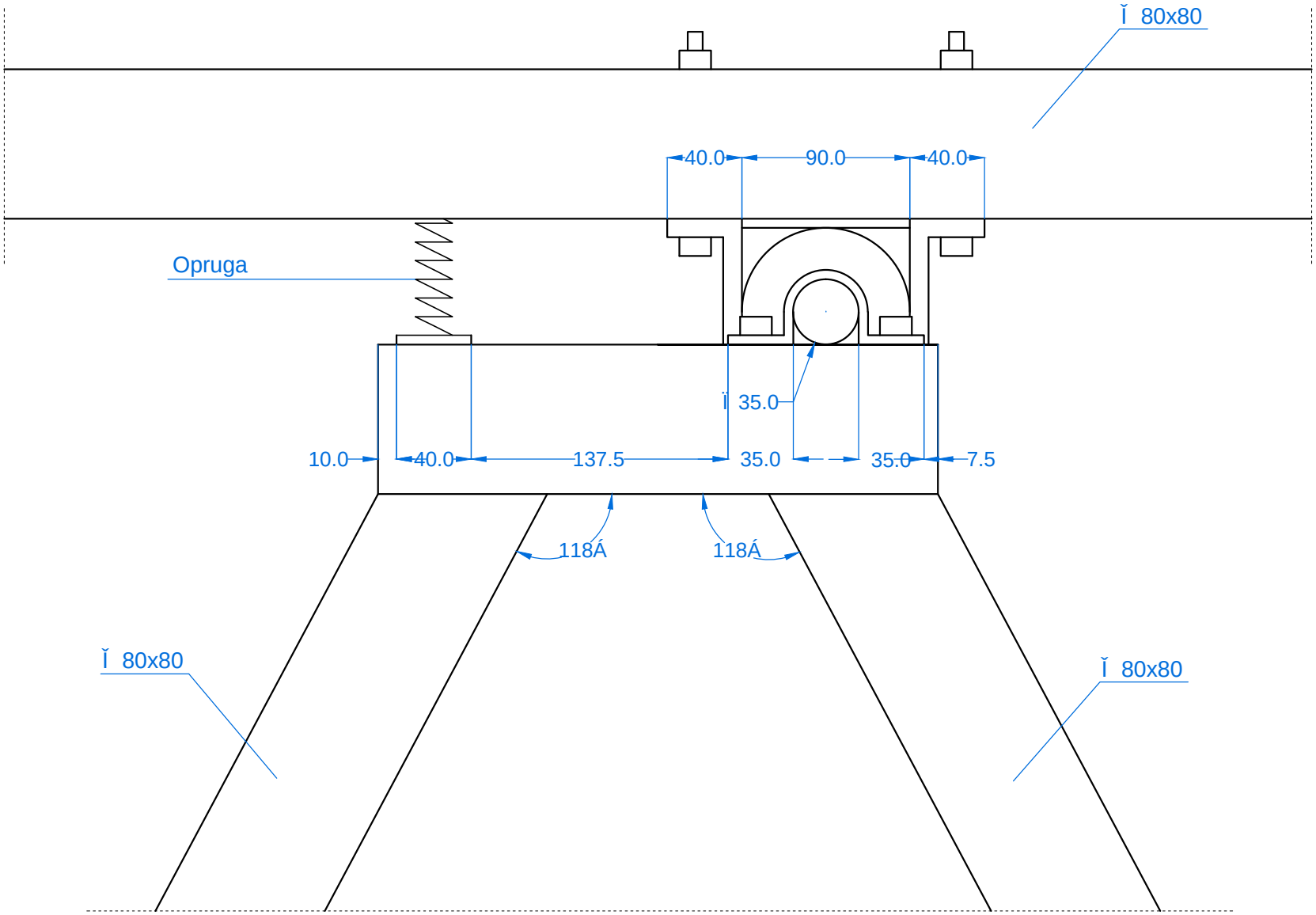
Ĭ 80x80
40.0
90.0
40.0
Opruga
Ï 35.0
10.0
40.0
137.5
35.0
35.0
7.5
118Á
118Á
Ĭ 80x80
Ĭ 80x80

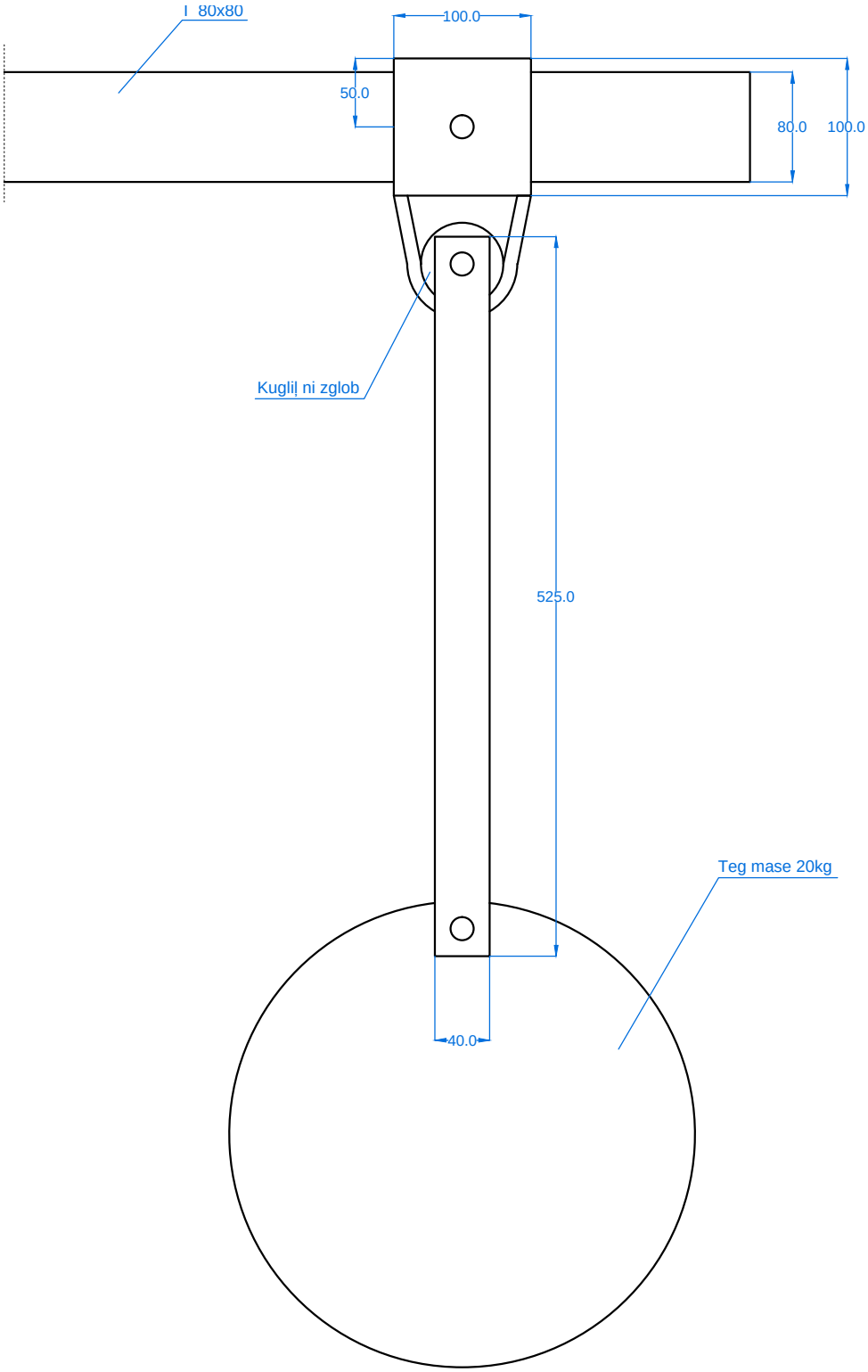
I 80x80
100.0
50.0
80.0
100.0
Kugliļ ni zglob
525.0
Teg mase 20kg
40.0